Quartz Crystal Specification

IQD Part No.: LFXTAL055663

Wurth Part No. ***830055663***

Description

- Standard 5x3.2mm SMD crystal with four pads. Ceramic package with a seam sealed metal lid, hermetically sealed.
- Model: CFPX-104
- Model Issue number: 11

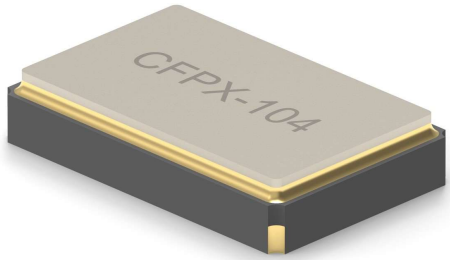

Frequency Parameters

- Frequency: 8.0MHz
- Frequency Tolerance: ±20.00ppm
- Tolerance Condition: @25°C
- Frequency Stability: ±30.00ppm
- Operating Temperature Range: -40.00 to 85.00°C
- Overtone Order: Fundamental
- Ageing: ±3ppm max per year @25°C

Electrical Parameters

- Load Capacitance (CL): 18.00pF
- Shunt Capacitance (C0): 7pF max
- Drive Level: 100µW max
- ESR: 150.00Ω max

Environmental Parameters

- Shock: 1500g, 0.5ms, 3 times in each of 3 mutually perpendicular planes.
- Vibration: MIL-STD-883F, 20g (20Hz~2000Hz), 1.52mm amplitude, 20 minutes in 3 mutually perpendicular planes, 4 cycles.
- Storage Temperature Range: -55 to 125°C

Manufacturing Details

- RoHS Terminations: Au 0.3um~1.0um
- RoHS Reflow Temp: 260°C max for 30 seconds

Compliance

- RoHS Status (2015/863/EU): Compliant
- REACh Status: Compliant
- MSL Rating (JDEC-STD-033): Not Applicable

Packaging Details

- Tape & reel in accordance with EIA-481 Quantities below the standard reel size to be supplied on cut tape.

  Standard Quantity: 1,000 Pieces

Outline (mm)

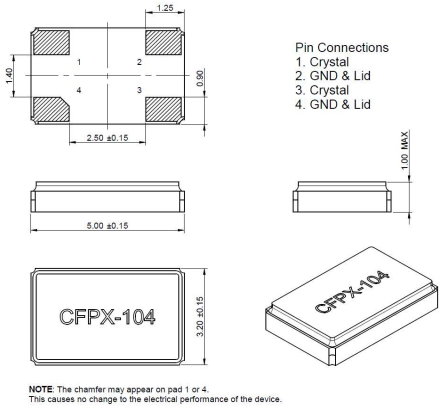

Recommended Solder Pad Layout

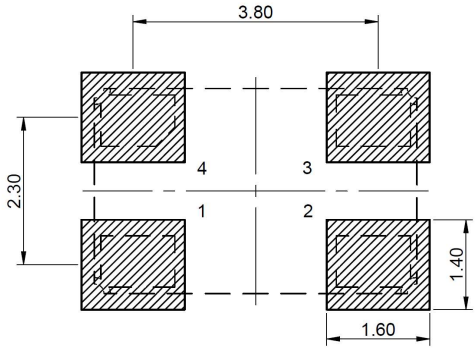

CONTACT INFORMATION:
Würth Elektronik eiSos GmbH & Co. KG
Max-Eyth-Str. 1, 74638 Waldenburg, Germany
Tel: +49(0) 7942 945-0

Email: eiSos@we-online.de
Web: www.we-online.com

USEFUL LINKS

Toolbox:
www.we-online.com/toolbox

Product Catalog:
www.we-online.com/products

CONTACT INFORMATION:
Würth Elektronik eiSos GmbH & Co. KG
Max-Eyth-Str. 1, 74638 Waldenburg, Germany
Tel: +49(0) 7942 945-0

Email: eiSos@we-online.de
Web: www.we-online.com